ICOM

INSTRUCTION MANUAL

HF AUTOMATIC
ANTENNA TUNER

AT-141

www.shiptron.nl
www.shiptron.com

Icom Inc.

FOREWORD

Thank you for purchasing the **AT-141 HF AUTOMATIC ANTENNA TUNER**.

The AT-141 is designed, primarily for use with Icom HF transceivers.

Refer to your HF transceiver instruction manual for operation. If you have any questions, contact your dealer.

IMPORTANT

READ ALL INSTRUCTIONS carefully and completely before using the AT-141.

SAVE THIS INSTRUCTION MANUAL. This instruction manual contains important safety and installation instructions.

EXPLICIT DEFINITIONS

Word	Definition
⚠ **WARNING**	Personal injury, fire hazard or electric shock may occur.
CAUTION	Equipment damage may occur.
NOTE	If disregarded, inconvenience only. No personal injury, fire hazard or electric shock.

PRECAUTIONS

⚠ **DANGER HIGH VOLTAGE! NEVER** touch the antenna terminal, ground terminal, antenna or counterpoise while transmitting. Place the AT-141, antenna and counterpoise in positions where no one can touch them.

NEVER use without a ground connection.

NEVER transmit during internal adjustment. This may cause an electric shock.

USE the ground terminal for ground connection. The mounting plate is not connected internally.

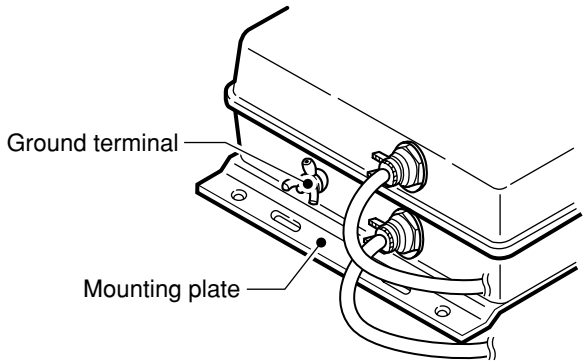

DO NOT operate your HF marine transceiver without running the boat's engine.

AVOID using the AT-141 in areas where the temperature is below –30°C or above +60°C.

SUPPLIED ACCESSORIES

The following accessories are supplied with the AT-141.

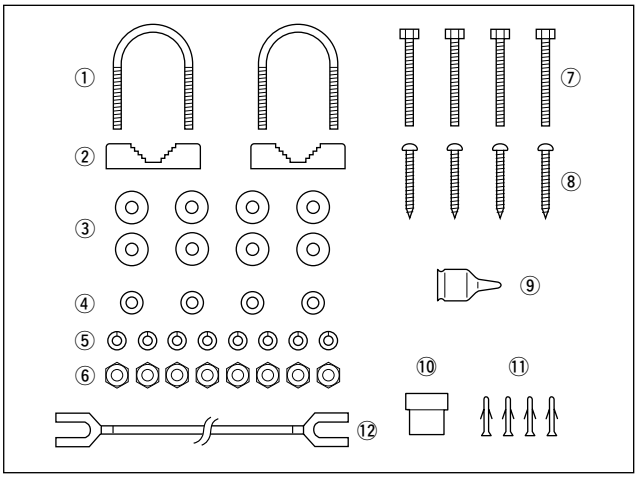

	Qty.
① U-bolts	2
② U-bolt plates	2
③ Flat washers (M6 large)	8
④ Flat washers (M6 small)	4
⑤ Spring washers (M6)	8
⑥ Nuts (M6)	8
⑦ Hex head bolts (M6×50)	4
⑧ Self-tapping screws (A0 6×30)	4
⑨ Weatherproof cap	1
⑩ 4-pin connector	1
⑪ Connector pins	4
⑫ Ground cable (OPC-412)	1

Icom, Icom Inc. and the ICOM logo are registered trademarks of Icom Incorporated (Japan) in the United States, the United Kingdom, Germany, France, Spain, Russia and/or other countries.

MISCELLANEOUS ITEMS

The following parts are additionally required for installation, but are not supplied with the AT-141.
Purchase these parts locally.

① AWG 14×4-conductor shielded cable
*Icom offers an optional OPC-1465 CONTROL CABLE.
Length: 10 m; 32.8 feet
② 50 Ω coaxial cable
③ PL-259 connectors

FEATURES

Matches all bands
The AT-141 matches any frequency on every HF marine band. For example, the tuner matches a 7 m; 23 ft long-wire antenna across 1.6–30 MHz.

Full automatic tuning
Just push the [TUNE] key on the transceiver, and the AT-141 adjusts immediately to the minimum SWR of any frequency on any HF marine band.

HF operation on any size ship
The AT-141 allows you HF operation where antenna element length is restricted due to space.

Weather resistant
The AT-141 is housed in a durable, completely weather resistant ASA case with a rubber gasket. The antenna tuner can be conveniently installed both on the deck or in the cabin near the antenna element.

Simple installation
Installation is simple. Just connect the control and antenna cables. You never need to open the cover.

45 memories for shorter tuning time
To decrease the tune-up time, the AT-141 automatically stores the matching conditions for up to 45 frequencies. Re-tuning for a memorized frequency takes approx. 1 sec.

Super capacitor for memory backup
Even if the AT-141 is not used for approx. 1 week, the built-in super capacitor backs up contents of the 45 memories.

Low power tune up
The AT-141 emits low output power during tuning. This feature reduces the possibility of causing interference to other stations.

Tuner through function
The tuner through function is built into the AT-141. This function helps improve receiver gain, depending on the antenna element length used, and operating frequency.

TABLE OF CONTENTS

FOREWORD i
IMPORTANT i
EXPLICIT DEFINITIONS i
PRECAUTIONS i
SUPPLIED ACCESSORIES i
MISCELLANEOUS ITEMS ii
FEATURES ii
TABLE OF CONTENTS ii
1 ANTENNA SYSTEM 1–2
■ Antenna for ship 1
■ Coaxial cable 2
■ Ground and counterpoise 2
2 INSTALLATIONS 3–5
■ Installation outline 3
■ Control cable 3
■ PL-259 connector 4
■ Mounting 4
■ Cable connections 5
3 CONTROL CABLE SIGNALS 6
■ Terminal information 6
4 UNIT DESCRIPTION AND SPECIFICATIONS ... 7
■ Unit description 7
■ Specifications 7

■ Antenna for ship

Required antenna element length

Required antenna element length to achieve full performance varies according to the lowest frequency:

The lowest frequency	Required antenna element length
1.6 MHz band	7 m; 23.0 feet or longer
4 MHz band	3 m; 9.8 feet or longer

The longer the antenna element, the better the antenna efficiency.

Undesirable antenna element lengths

AVOID multiples of ½λ (half wavelength) for antenna element lengths, since tuning becomes difficult.

L : Antenna element length to be avoided [m]
f : Operating frequency [MHz]
n : Natural number (n = 1, 2, 3, ...)

$$L = \frac{300}{f} \times \frac{1}{2} \times n$$

[Example]
At an operating frequency of 16 MHz, avoid the following antenna element lengths:

$$L = \frac{300}{16} \times \frac{1}{2} \times n \approx 9.4, 18.8, \ldots$$

1 m ≈ 39 inches

For example, if 15 m is selected for an antenna element length, you have no problem in the 1.6–25 MHz marine bands range.

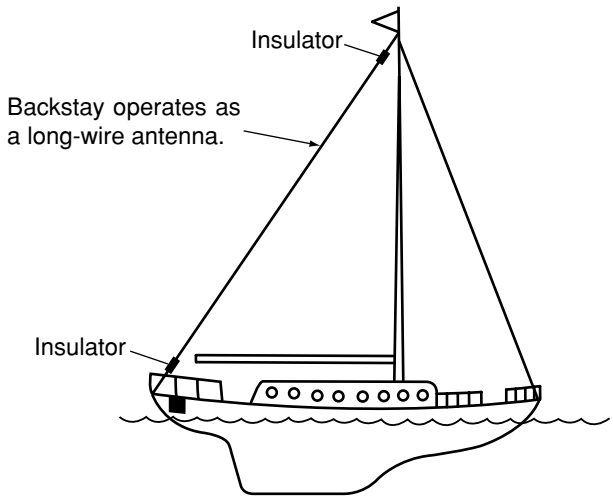

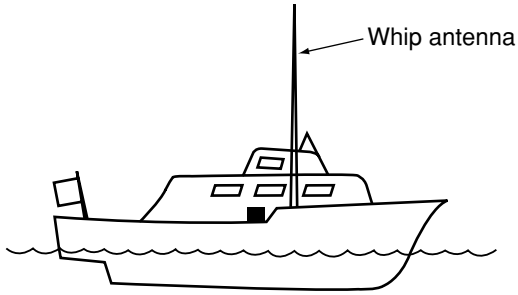

NOTE: Keep antennas as far away from other objects as possible, especially metal objects.

■ Coaxial cable

Insulate the lead-in cable of the AT-141 antenna terminal and antenna element from other metal objects.

To prevent interference, keep cables as far as possible from an antenna, electric pump and other electronic equipment.

To prevent erroneous indications, keep cables as far away as possible from the flux gate compass.

Use suitable noise filters for alternators, fluorescent lights, etc. Ask your Dealer for details.

■ Ground and counterpoise

Why a ship's ground is required

The AT-141's ground terminal **MUST** be connected to your ship's ground. Grounding prevents electric shocks, interference to other equipment and other problems. Grounding also ensures effective signal transmission.

DANGER! NEVER connect the ground terminal to the following points. These connections may cause an explosion or electric shocks:
– Gas or electrical pipe
– Fuel tank or oil-catch pan

IMPORTANT! The mounting plate is **NOT** connected to the AT-141's internal ground.

Ideal ground points

One of following points is ideal:
– External ground plate
– External copper screen
– External copper foil

Good ground points

If electrically connected to sea water, one of the following points is usable:
– Stainless steel stanchion
– Through mast
– Through hull
– Metal water tank

Undesirable ground points

AVOID the following points, if possible. These connections may cause noise or electrolysis:
– Engine block
– Ship's DC battery ground

Electrolysis

All ground cables from the AT-141, HF transceiver, etc. on your ship should be connected to only 1 ship's ground.

AVOID connection to 2 or more points. Voltage difference between 2 or more ship's grounds may cause electrolysis.

AVOID connection between dissimilar metals where an electric current is present. These connections may cause electrolysis.

Counterpoise

If your ship is made of FRP, etc. and a good ship's ground is not available, connect a counterpoise.

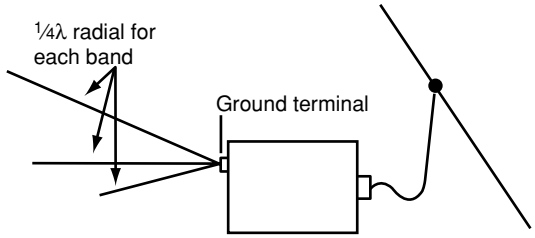

AT-141

¼λ (quarter wavelength) radial for each band is suitable for a counterpoise. Install the counterpoise directly below the AT-141's ground terminal. Insulate the ends of each radial from other metal objects. Layout the radial horizontally and as straight as possible.

L : Counterpoise length for the operating frequency [m]
f : Operating frequency [MHz]

$$L = \frac{300}{f} \times \frac{1}{4}$$

[Example]
At an operating frequency of 16 MHz, use a counterpoise with the following length:

$$L = \frac{300}{16} \times \frac{1}{4} \approx 4.7 \text{ [m]}$$

1 m ≈ 39 inches

Ground cable

For best results, use the heaviest gauge wire or metal strap available. Make the distance between the AT-141's ground terminal and ship's ground as short as possible.

Supplied ground cable can be used for ground connection to a through mast. Confirm that the through mast is electrically connected to sea water.

⚠ **WARNING!— *When grounding to metal hull***
Use a Zinc anode to protect the hull from electrolysis.

Ask your technical dealer, installer or refer to a technical book, etc., for RF ground details.

2 INSTALLATIONS

■ Installation outline

① Connect a control cable and 4-conductor shielded cable.
- Refer to “Control cable” below.

② Connect and solder the PL-259 connector to the coaxial cable.
- Refer to p. 4 “PL-259 connector.”

③ Mount the AT-141 in the desired location.
- Refer to p. 4 “Mounting.”

④ Connect the control and the coaxial cables between the transceiver and the AT-141.
- Refer to p. 5 “Cable connections.”

⑤ Connect an antenna, ship’s ground or counterpoise.
- Refer to p. 1 “Antenna for ship” and p. 2 “Ground and counterpoise.”

■ Control cable

Between the AT-141 and HF marine transceiver, connect 4 control signal lines as shown below. To prevent RF feedback, use a 4-conductor shielded cable. Connect the shield line to the [GND] terminal on the transceiver. Icom offers 10 m (32.8 ft) long optional control cables as at right.

OPC-1465 : for IC-M801E

Refer to p. 6 “Terminal information” for details.

◇ **When connecting to Icom IC-M801E**

Use the optional OPC-1465, or assemble the desired length 4-conductor shielded cable and the connector kits supplied with the transceiver and the tuner.

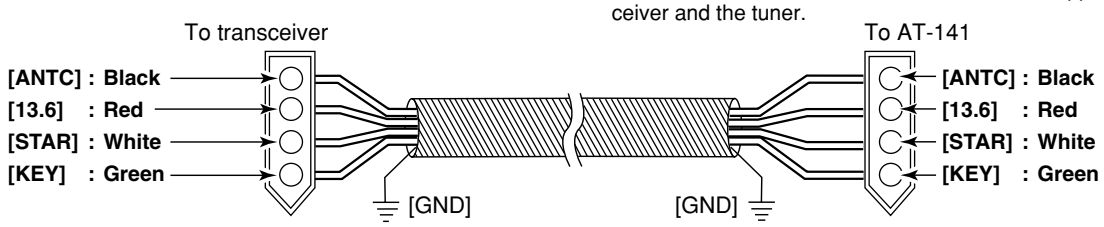

■ PL-259 connector

① Slide the coupling ring over the coaxial cable. Strip the cable jacket and pull back to reveal 10 mm of braid.
• Soft solder the exposed braid and then pull out the jacket.

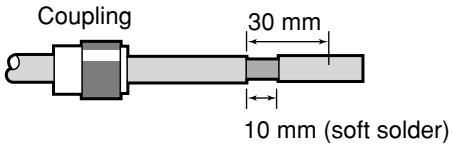

② Strip the cable as shown below. Soft solder the center conductor the entire length of the exposed braid.

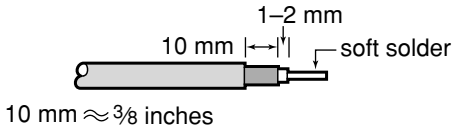

③ Slide the connector body over the cable and solder as shown below.

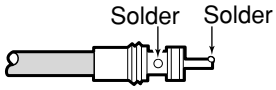

④ Screw the coupling ring onto the connector body.

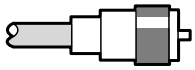

■ Mounting

Attach the AT-141 either horizontally or vertically with one of the water drains facing downwards. After mounting, remove the screw in the water drain.

Mounting on a Mast/Metal pole

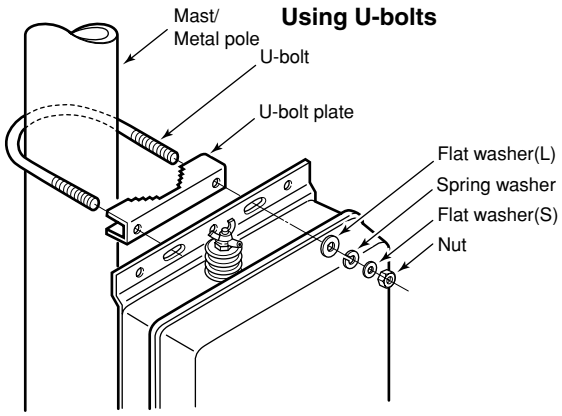

WARNING: Mount the AT-141 securely with the supplied nuts and bolts. Otherwise, vibrations and shocks due to waves, etc. could loosen the antenna tuner making if fall, causing personal injury.

Mounting on a flat surface

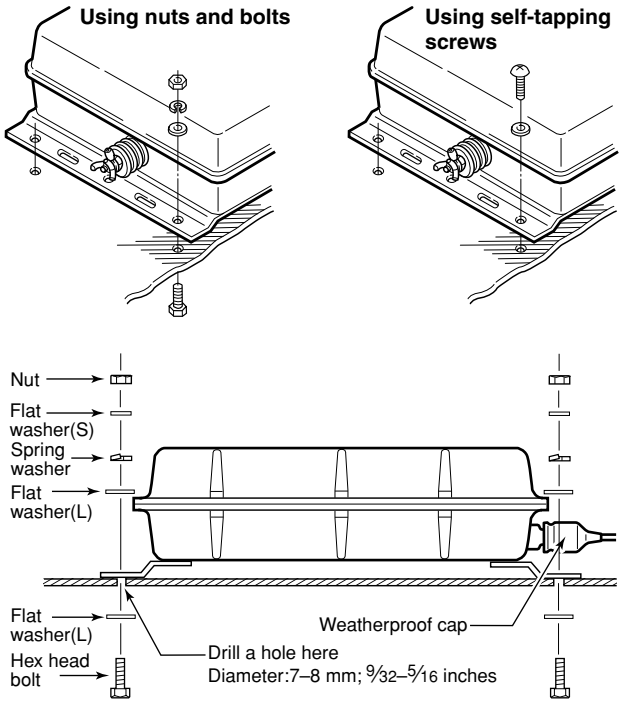

■ Cable connections

① Connect the coaxial cable and the control cable to the AT-141 as illustrated below.
② Cover both the antenna and the control cable connectors with rubber vulcanizing tape and fix it with a vinyl tape to prevent water seeping into the connector.

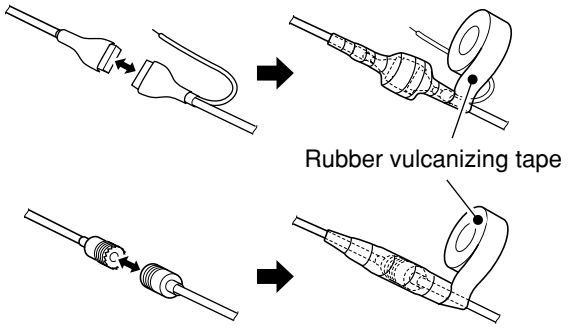

③ Fix both of the coaxial and control cables to protect the inside connections.

DO NOT pull the antenna and control cable receptacles. This may cause disconnection (in the AT-141), internal connector damaged or bad connection.

④ Connect the coaxial cable and the control cable to the transceiver as illustrated below.
⑤ Ground the transceiver, AT-141 and shield cable of the control cable via the ground terminal.
• See p. 2 for grounding details.

IMPORTANT!— AT-141
NEVER ground the AT141 via the mounting plate. It is not connected to ground internally.

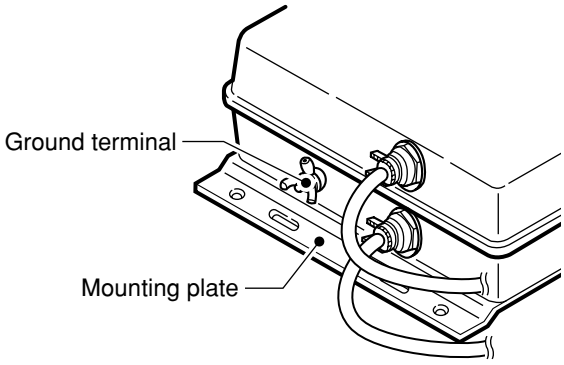

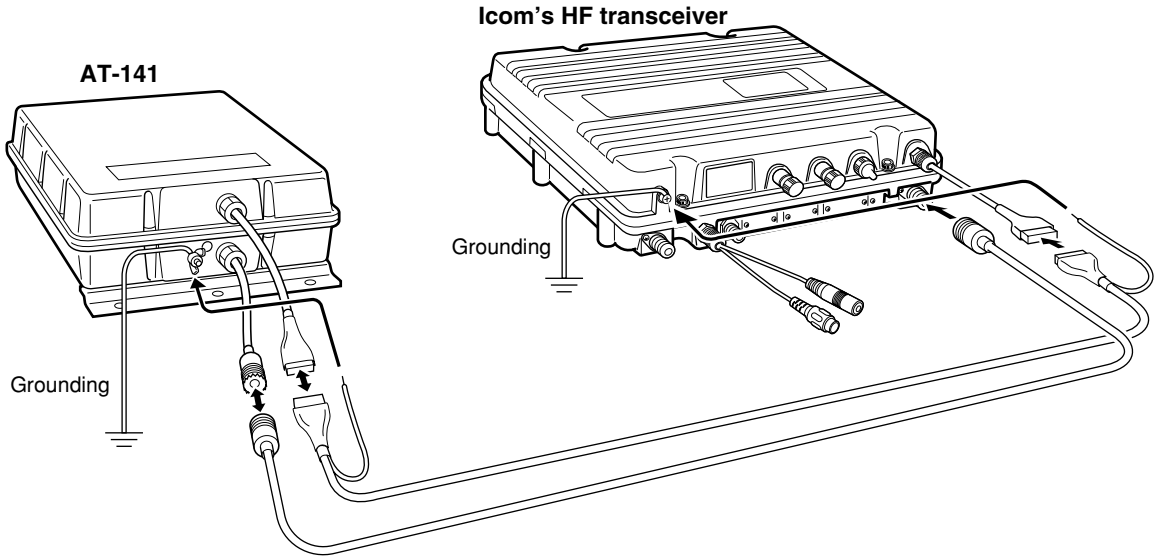

■ Terminal information

Consider the following points when using a non-Icom transceiver.

Terminal	Description
[KEY]	Key voltage. Grounded during tuning. Max. current drain 100 mA.
[13.6]	13.6 V DC ⊕ input terminal. Max. current drain 2 A
[STAR]	Receives start voltage. Max. current drain 1 mA
[ANTC]	Antenna current detector output.

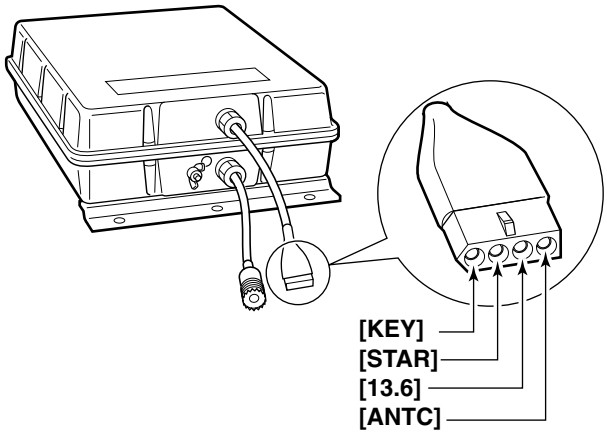

Start voltage [STAR]

When a start voltage (less than 1 V) is received, the AT-141 begins automatic tuning.

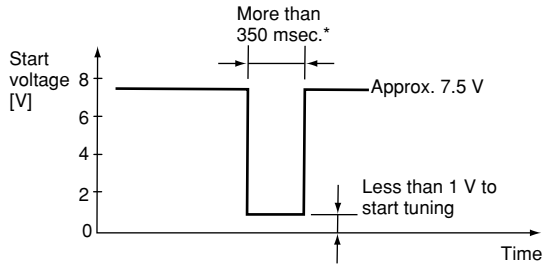

*For tuner through operation; Less than 250 msec.

Key voltage [KEY]

During automatic tuning, the AT-141 grounds the key voltage line, and the HF transceiver reduces output power.

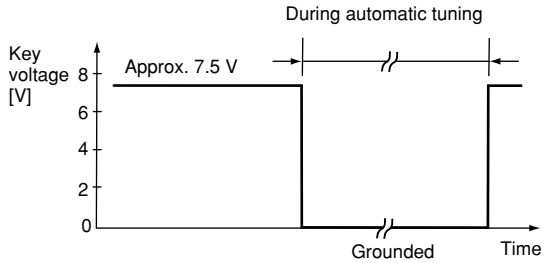

4 UNIT DESCRIPTION AND SPECIFICATIONS

■ Unit description

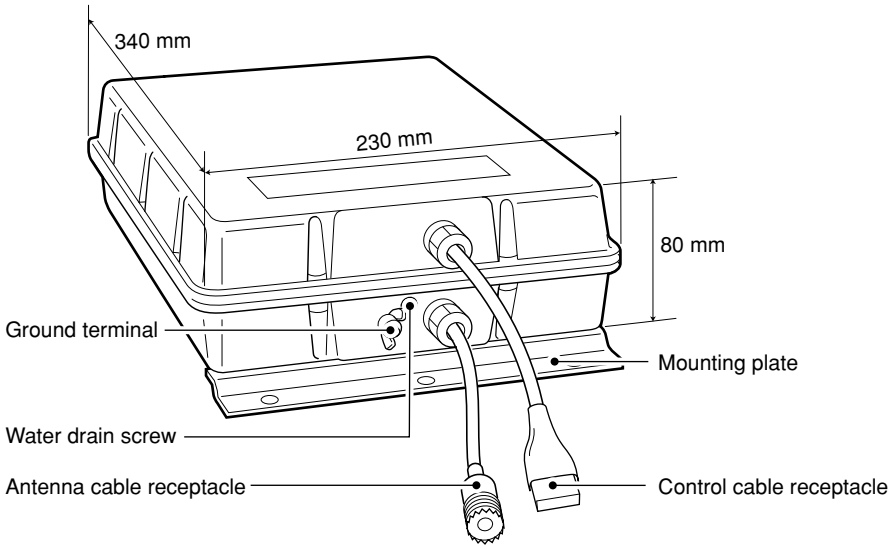

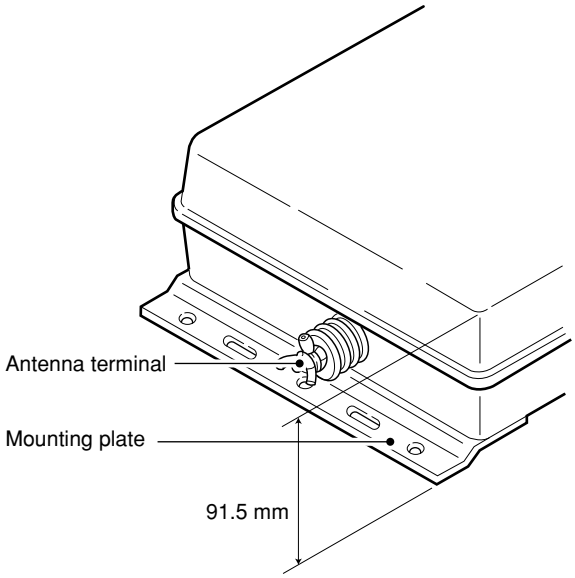

■ Specifications

- Frequency coverage : 1.6–30 MHz (with 7 m or longer antenna element)
- Power supply requirement : 13.6 V DC (supplied from HF transceiver)
- Current drain : Max. 2 A
- Operating temperature range : –30°C to +60°C
- Weight (approx.) : 2.5 kg
- Antenna connector : SO-239 (50 Ω)
- Max. Input power : 150 W (PEP) 100 W (continuous)
- Automatic tuning time : Approx. 2–3 sec. (general condition) Max. 15 sec.
  Approx. 1 sec. (re-tuning for a memorized frequency)
- Automatic tuning accuracy : SWR 2.0:1 (after tuning, except for multiples of ½λ)

All stated specifications are subject to change without notice or obligation.

Count on us!

Icom America Inc.
<Corporate Headquarters>
2380 116th Avenue N.E., Bellevue, WA 98004, U.S.A.
Phone: +1 (425) 454-8155 Fax: +1 (425) 454-1509
URL: http//www.icomamerica.com
E-mail: sales@icomamerica.com
<Customer service>
Phone: (425) 454-7619

Icom (Europe) GmbH
Communication Equipment
Himmelgeister Str. 100,
D-40255 Düsseldorf, Germany
Phone: +49 0211 346047 Fax: +49 0211 333639
URL: http//www.icomeurope.com
E-mail: info@icomeurope.com

Icom Canada
Glenwood Centre #150-6165 Highway 17, Delta, B.C., V4K 5B8, Canada
Phone: +1 (604) 952-4266 Fax: +1 (604) 952-0090
URL: http//www.icomcanada.com
E-mail: info@icomcanada.com

Icom Spain S.L.
Ctra. Rubi, No. 88 "Edificio Can Castanyer"
08190, Sant Cugat del Valles, Barcelona, Spain
Phone: +34 (93) 590 26 70 Fax: +34 (93) 589 04 46
URL: http//www.icomspain.com
E-mail: icom@icomspain.com

Icom (Australia) Pty. Ltd.
A.B.N. 88 006 092 575
Unit 1/103, Garden Road, Clayton, Victoria, 3168, Australia
Phone: +61 (03) 9549 7500 Fax: +61 (03) 9549 7505
URL: http//www.icom.net.au
E-mail: sales@icom.net.au

Icom (UK) Ltd.
Unit 9, Sea St., Herne Bay, Kent, CT6 8LD, U.K.
Phone: +44 01227 741741 Fax: +44 01227 741742
URL: http//www.icomuk.co.uk
E-mail: info@icomuk.co.uk

Icom New Zealand
146A Harris Road, East Tamaki, Auckland, New Zealand
Phone: +64 09 274 4062 Fax: +64 09 274 4708
URL: http//www.icom.co.nz
E-mail: inquiries@icom.co.nz

Icom France S.a
Zac de la Plaine, 1, Rue Brindejonc des Moulinais
BP 5804, 31505 Toulouse Cedex, France
Phone: +33 (5) 61 36 03 03 Fax: +33 (5) 61 36 03 00
URL: http://www.icom-france.com
E-mail: icom@icom-france.com

Asia Icom Inc.
6F No. 68, Sec. 1 Cheng-Teh Road, Taipei, Taiwan R.O.C.
Phone: +886 (02) 2559 1899 Fax: +886 (02) 2559 1874
URL: http//www.asia-icom.com
E-mail: sales@asia-icom.com

Icom Polska
Sopot, 3 Maja 54 Poland
Phone: +48 (58) 550 7135 Fax: +48 (58) 551 0484
E-mail: icompolska@icompolska.com.pl

Beijing Icom Ltd.
Room C01, 10th Floor, Long Silver Mansion, No.88 Yong Ding Road, Haidian District, Beijing, 100039, China
Phone: +86 (010) 5889 4250Fax: +86 (010) 5889 4250
URL: http//www.bjicom.com
E-mail: bjicom@bjicom.com

A-6472H-1EU
Printed in Japan

© 2005 Icom Inc.

Icom Inc.
1-1-32 Kamiminami, Hirano-ku, Osaka 547-0003, Japan